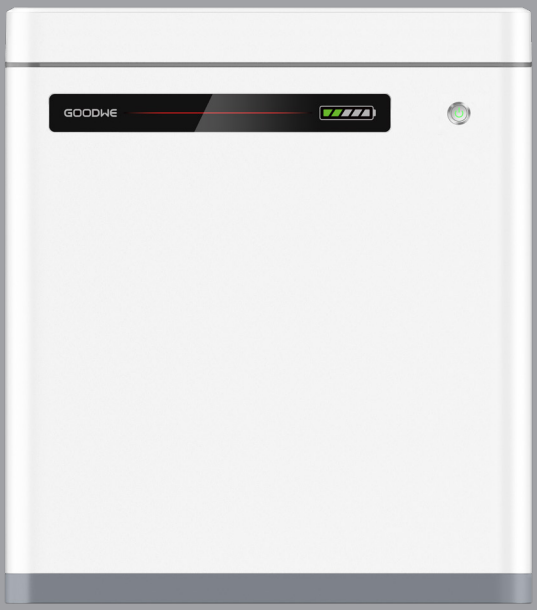

CELEBRATING 100 YEARS OF MARLEY

LYNX HOME U SERIES BATTERY

User manual

Marley

Copyright ©GoodWe Technologies Co., Ltd., 2023. All rights reserved

No part of this manual can be reproduced or transmitted to the public platform in any form or by any means without the prior written authorization of GoodWe Technologies Co., Ltd.

Trademarks

GOODWE and other GOODWE trademarks are trademarks of GoodWe Technologies Co.,Ltd. All other trademarks or registered trademarks mentioned in this manual are owned by GoodWe Technologies Co.,Ltd.

NOTICE

The information in this user manual is subject to change due to product updates or other reasons. This guide cannot replace the product labels or the safety precautions in the user manual unless otherwise specified. All descriptions here are for guidance only.

TABLE OF CONTENTS

Updates

The latest document contains all the updates made in earlier issues.

V1.0 01.02.2024

01 About This Manual

This manual describes the product information, installation, electrical connection, commissioning, troubleshooting and maintenance. Read through this manual before installing and operating the product. All the installers and users have to be familiar with the product features, functions, and safety precautions. This manual is subject to update without notice. For more product details and latest documents, visit https://en.goodwe.com.

1.1 Applicable Model

This manual applies to the listed models below:

- LX U5.4-L
- LX U5.4-20

1.2 Target Audience

This manual applies to trained and knowledgeable technical professionals. The technical personnel has to be familiar with the product, local standards, and electric systems.

1.3 Symbol Definition

Different levels of warning messages in this manual are defined as follows:

DANGER
Indicates a high-level hazard that, if not avoided, will result in death or serious injury.
WARNING
Indicates a medium-level hazard that, if not avoided, could result in death or serious injury.
CAUTION
Indicates a low-level hazard that, if not avoided, could result in minor or moderate injury.
NOTICE
Highlights and supplements the texts. Or some skills and methods to solve product-related problems to save time.

Updates

The latest document contains all the updates made in earlier issues.

V1.0 01.02.2024

02 Safety Precaution

Please strictly follow these safety instructions in the user manual during the operation.

NOTICE

The products are designed and tested strictly to comply with related safety rules. Read and follow all the safety instructions and cautions before any operations. Improper operation might cause personal injury or property damage as the products are electrical equipment.

2.1 General Safety

NOTICE

- The information in this user manual is subject to change due to product updates or other reasons. This guide cannot replace the product labels or the safety precautions in the user manual unless otherwise specified. All descriptions here are for guidance only.
- Before installations, read through the user manual to learn about the product and the precautions.
- All operations should be performed by trained and knowledgeable technicians who are familiar with local standards and safety regulations.
- Use insulating tools and wear personal protective equipment (PPE) when operating the equipment to ensure personal safety. Wear anti-static gloves, cloths, and wrist strips when touching electronic devices to protect the equipment from damage.
- Strictly follow the installation, operation, and configuration instructions in this manual. The manufacturer shall not be liable for equipment damage or personal injury if you do not follow the instructions. For more warrant information, please visit: https://en.goodwe.com/warranty.

2.2 Battery Safety

DANGER

- The battery system exists low voltage during the equipment running. Please keep Power Off before any operations to avoid danger. Strictly follow all safety precautions outlined in this manual and safety labels on the equipment during the operation.
- The inverter used with the battery shall be approved by the battery manufacturer. The approved list of battery and the matched inverter can be obtained through the official website.
- Do not disassemble, modify, or replace any part of the battery or the power control unit without official authorization from the manufacturer. Otherwise, it will cause electrical shock or damages to the equipment, which shall not be borne by the manufacturer.
- Do not hit, pull, drag, squeeze or step on the equipment or put the battery into fire. Otherwise, the battery may explode.
- Do not place the battery in a high temperature environment. Make sure that there is no direct sunlight and no heat source near the battery. When the ambient temperature exceeds 60 °C, it will cause fire.
- Do not use the battery or the power control unit if it is defective, broken, or damaged. Damaged battery may leak electrolyte.
- To protect the battery pack and its components from damage during transportation, please ensure that the transportation personnel are professionally trained. All operations during the transportation have to be recorded. The equipment shall be kept in balance, thus avoiding falling down.
- The battery equipment is heavy. Please equip the corresponding personnel according to its weight, so that the equipment does not exceed the weight range of the human body can carry, and cause personnel injury.
- Contact after-sale service immediately if the battery is not able to be started. Otherwise, the battery might be damaged permanently.
- Do not move the battery system if it is connected with external battery modules. Contact after-sales service if the battery shall be replaced or added.

CAUTION

- Protect the battery system from damage during transportation and storage.
- The transportation must be carried out by trained professionals. All operations during the process have to be recorded.
- Keep the equipment stable to avoid dumping, which can result in equipment damage and personal injuries.
- Place the cables at least 30mm away from the heating components or heat sources, otherwise the insulation layer of the cables may be aging or broken due to high temperature.
- Tie the cables of the same type together, and place cables of different types at least 30mm apart. Do not place the cables entangled or crossed.

Label Description

Symbol	Description	Symbol	Description
	Potential risks exist. Wear proper PPE before any operations.		Install the equipment away from fire sources.
	High voltage hazard. Power off the equipment first before any operations.		Keep the equipment away from children.
	Operate the equipment properly to avoid explosion danger.		No extinguishing with water.
	The equipment contains corrosive electrolytes. In case of a leak in the equipment, avoid contact the leaked liquid or gas.		Do not dispose of the equipment with household garbage at its end of life.
	Read through the user manual before any operations.		Put the battery in the right place and recycle it in compliance with local environmental regulations.
	Pay attention to safety protection during installation		CE Mark
	RCM Mark		Grounding. To indicate PE cable connection position.

2.3 Emergency Measures

Battery Electrolyte Leakage

If the battery module leaks electrolyte, avoid contact with the leaking liquid or gas. The electrolyte is corrosive. It will cause skin irritation or chemical burn to the operator. Anyone contact the leaked substance accidentally has to do as following:

- **Breath in the leaked substance**: Evacuate from the polluted area, and seek immediate medical assistance.
- **Eye contact**: Rinse your eyes for at least 15 minutes with clean water and seek immediate medical assistance.
- **Skin contact**: Thoroughly wash the touch area with soap and clean water, and seek immediate medical assistance.
- **Ingestion**: Induce vomiting, and seek immediate medical assistance.

Fire

- The battery may explode when the ambient temperature exceeds 150℃. Poisonous and hazard gas may be released if the battery is on fire.
- In the event of a fire, please make sure that the carbon dioxide extinguisher or Novac1230 FM-200 is nearby.
- The fire cannot be put out by water or ABC dry powder extinguisher. Firefighters are requir to wear full protective clothing and self-contained breathing apparatus.

2.4 EU Declaration of Conformity

GoodWe Technologies Co., Ltd. hereby declares that the inverter without wireless communication modules sold in the European market meets the requirements of the followin directives:

- Electromagnetic compatibility Directive 2014/30/EU (EMC)
- Electrical Apparatus Low Voltage Directive 2014/35/EU (LVD)
- Battery Directive 2006/66/EC and Amending Directive 2013/56/EU
- Waste Electrical and Electronic Equipment 2012/19/EU
- Registration, Evaluation, Authorization and Restriction of Chemicals (EC) No 1907/2006 (REACH)

You can download the EU Declaration of Conformity on the official website:https://en.goodwe com.

03 Product Introduction

- This manual introduces Lynx Home U Series(LV) Battery System (hereinafter referred to as the Battery System), including the product introduction, application, installation, commission, and technical parameters, etc.
- At most 6 batteries can be connected in this Battery System.
- The battery system can be compatible with the following inverter series:

Goodwe Inverter

3.1 Appearance

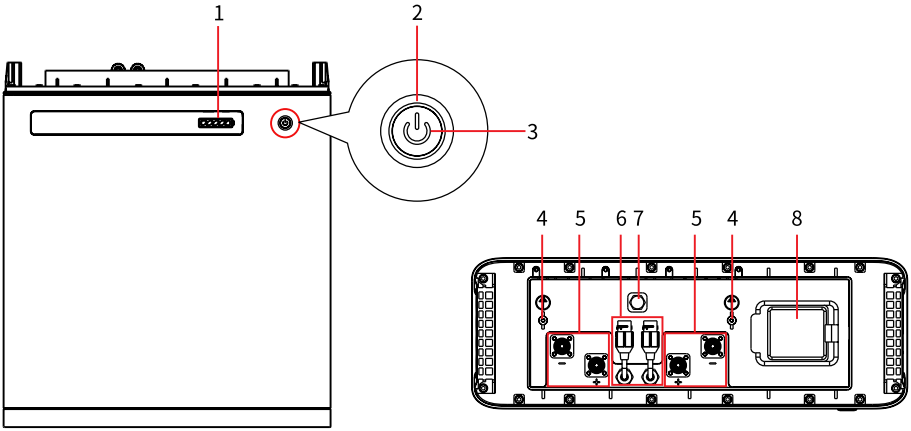

No.	Parts
1	SOC Indicator
2	Switch Button
3	Button Indicator
4	Grounding Teminal
5	Power Cable Port
6	CAN COM Port
7	Ventilation Valve
8	Circuit-Breaker

3.2 Dimensions

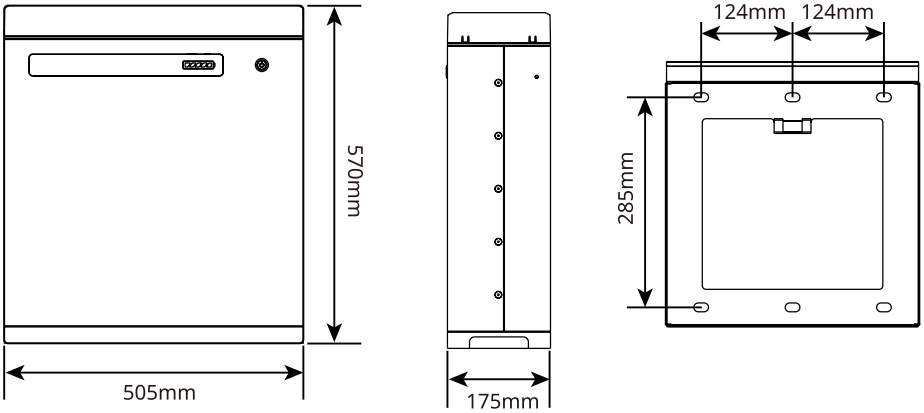

04 Storage and Package

4.1 Storage Environment

If the equipment is not to be installed or used immediately, please ensure that the storage environment meets the following requirements:

- Pack the equipment using a packing box and put some desiccant in the box before sealing.
- Put the equipment back to the packing box if it is not to be installed in 3 days after unpacking.
- Storage SOC: 25%~50%SOC. Charge and discharge the battery every 6 months.
- Recommended storage temperature: 0℃~35℃ (less than one year), -20℃~0℃ or 35℃~40℃ (less than one month).
-
- Recommended storage humidity: 0%~95%RH(no condensation). Do not install the battery if any moist or condensation is found.
- Place the quipment in a cool place where away from direct sunlight.
- Keep the equipment away from inflammable, explosive, and corrosive matters.
- Keep the equipment away from the rain.

4.2 Packing List

- Check outer packing for damage and model before unpacking it. If you find any damage or the model is not what you requested, do not unpack the product and contact the after-sales service as soon as possible.
- Check whether the deliverables are intact and complete first after unpacking the battery.If anything wrong, contact the after-sales service as soon as possible.

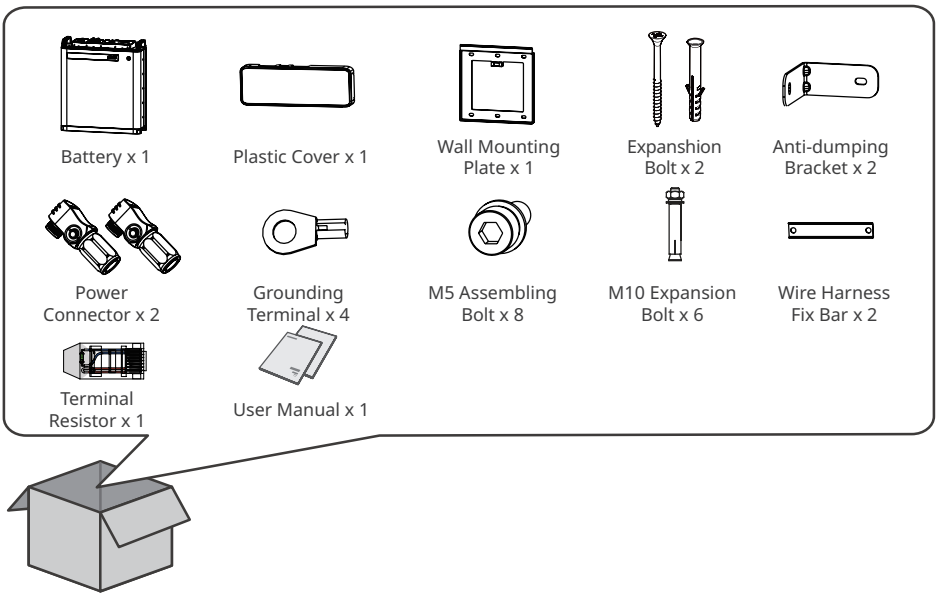

05 System Installation

5.1 Installation Environment

- Install the Battery System on the ground with sufficient bearing capacity and flatness. Increase the bearing capacity and flatness of the ground by laying the foundation, adding bearing plates and so on.
- The optimal temperature for the battery is 20~40℃.
- Avoid exposing the equipment to direct sunlight or rain.
- Install the equipment away from heat/cold source.
- Do not install the equipment in the place where the temperature changes extremely.
- Install the equipment away from strong interferences to ensure its regular work.
- Keep children away from the equipment.
- Do not install the equipment in places prone to accumulate water.
- Do not put inflammable or explosive matters near the equipment.

5.2 Space Requirements

NOTICE

The space between the left and the right battery is a recommened distance. Keep the distance as short as you can if there is no influence to the operation.

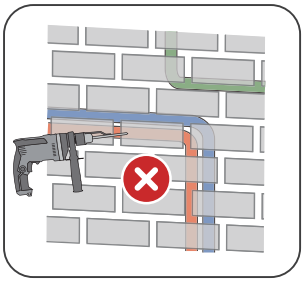

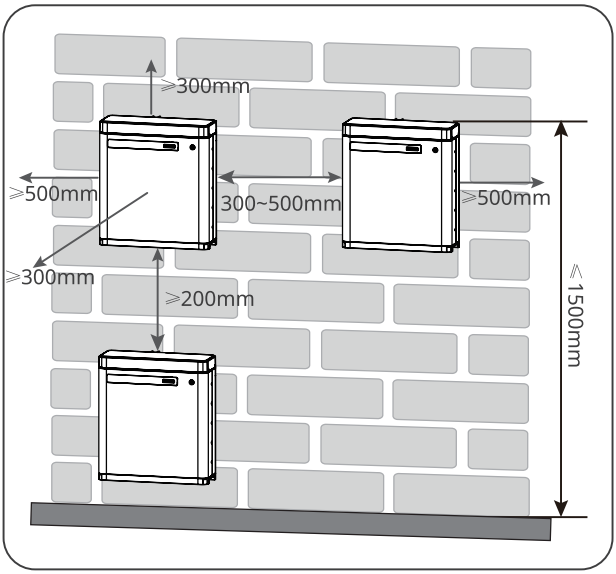

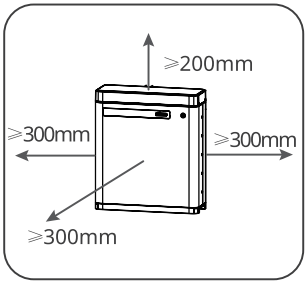

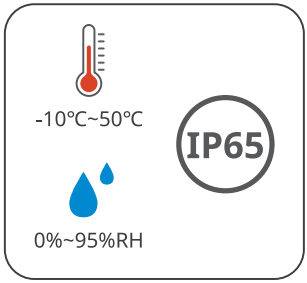

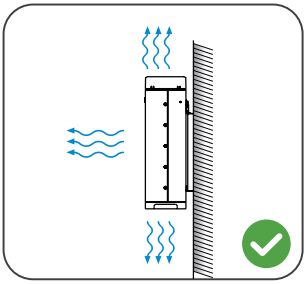

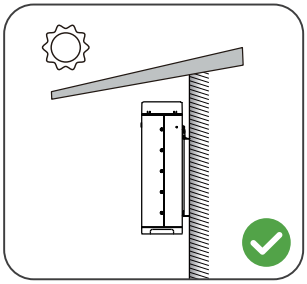

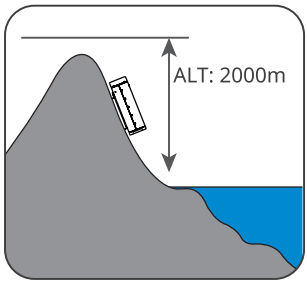

The installation distance shall statisfy the requirements of the battery and the inverter at the same time when an inverter is connected with the battery system. For the installation distance requirement of the inveter, please refer to the related inverter's user manual.

Mounting Support Requirements

- The mounting support shall be nonflammable and fireproof.
- Install the equipment on a surface that is solid enough to bear the product weight.
- Put the battery system near the wall and install the locking brackets to prevent the battery from falling down

Installation Angle Requirements

- Install the equipment vertically, no tilt or upside down.

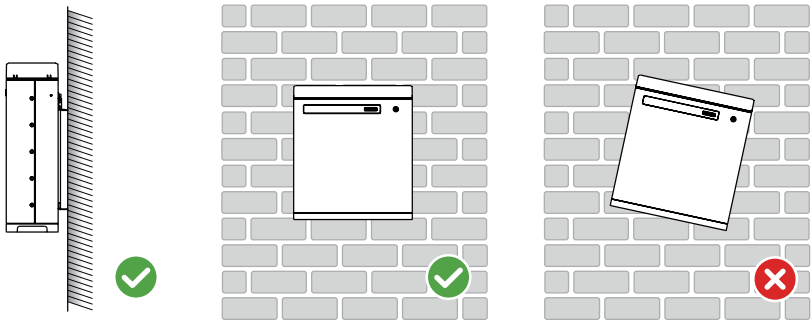

5.3 System Installation

NOTICE
If multi batteries are to be connected, check and select batteries with similar production date and a same cell grade.

5.3.1 Floor Mounting

Step1 Screw the anti-dumping bracke on the battery.
Step2 Align the battery and the wall, then put the anti-dumping bracket close to the wall. Mark the drilling position and remove the battery.
Step3 Drill a hole on the wall using the driller. Hole diameter 10mm and depth 80mm.
Step4 Fix the expansion bolts, tightening torque: 10N·m.

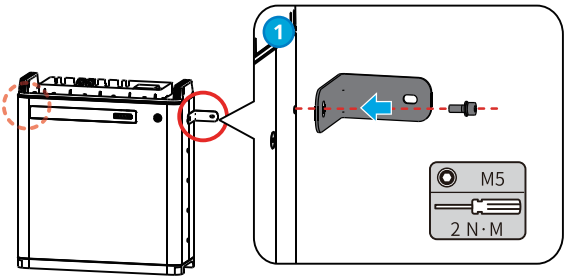

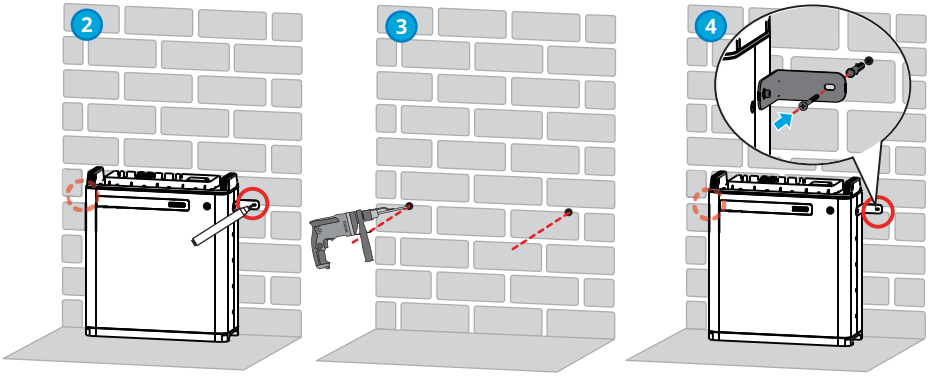

5.3.2 Wall Mounting

NOTICE
Wall mounting needs to be done by two persons.

Step1 Place the wall mounting plate close to the wall firmly, mark the drilling position and remove the wall mounting plate.
Step2 Drill a hole on the wall using the driller. Hole diameter 13mm and depth 65mm.
Step3 Fix the M10 expansion bolts, tightening torque: 10N·m.
Step4 Install the battery on the mounting plate.

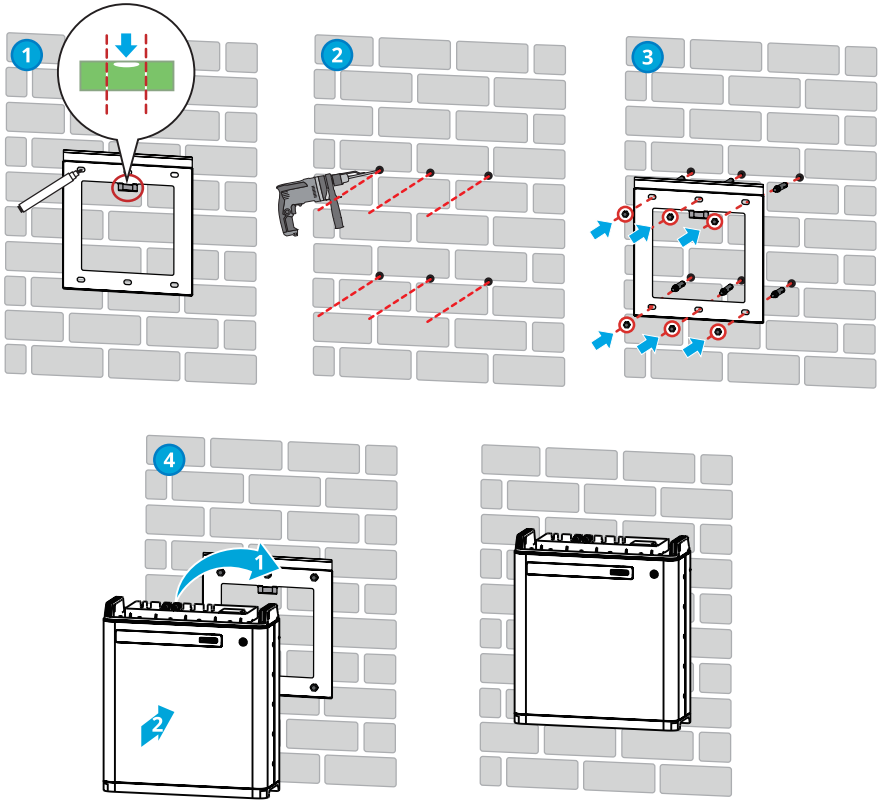

5.3.3 Cable Connection

Overview of the cable connection

Take SBP inverter series as an example connection here.

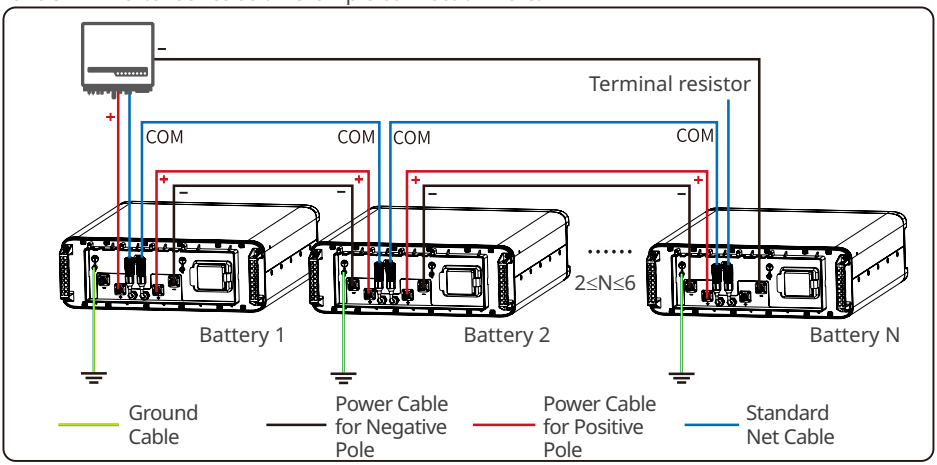

Ground Cable Connection

NOTICE

- Connect the PE cable first before installing the equipment. Disconnect the PE cable before dismantling the equipment.
- The drawing force of the cables after crimping is at least 400N.
- Connect any one of the two ground cables to the ground. Reserve the other ground cable.
- The cross-sectional area of the PE cable conductor: 4-6mm². The cable should meet standards for outdoor use.

Step1 Prepare PE cable.
Step2 Crimp the PE cable.
Step3 Install the Heat shrink tube.
Step4 Connect the PE cable to the battery.

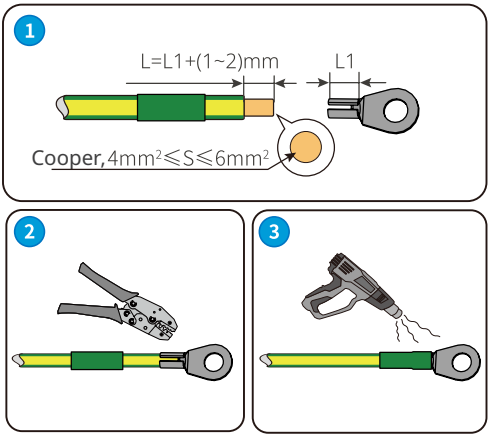

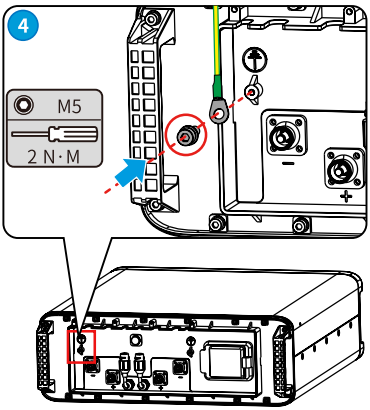

Power Cable Connection

NOTICE

- Connect the red power cable to the red wire harness, and the black power cable to the black wire harness. The cross-sectional area of the crimping part is 25mm^2.
- Withstand Voltage: DC1500V; Temperature: -40°C~200°C.
- Stripped conductor length: 18±1mm.
- Secure the back shell and check whether there is any gap.
- Recommended tool: manual hydraulic press plier(mould:25mm^2)
- Drawing force after crimping≥1200N.
- If a single battery is applied, you are suggested to connect any one of the two power ports and cover the other port using the protective cover.
- Connect power cables between multi batteries in parallel, which means connect postive pole of one battery to the positive pole of the next battery, and negative pole to negative pole. Cover and protect the reserved power port of the last battery.
- The power cable between the batteries should be as short as it can be and meet installation requirements.

Step1 Prepare Power cable.
Step2 Disassemble the Power connector.
Step3 Insert the Power Cable into the Power connector.
Step4 Plug the Power connector into the Power Cable Port.

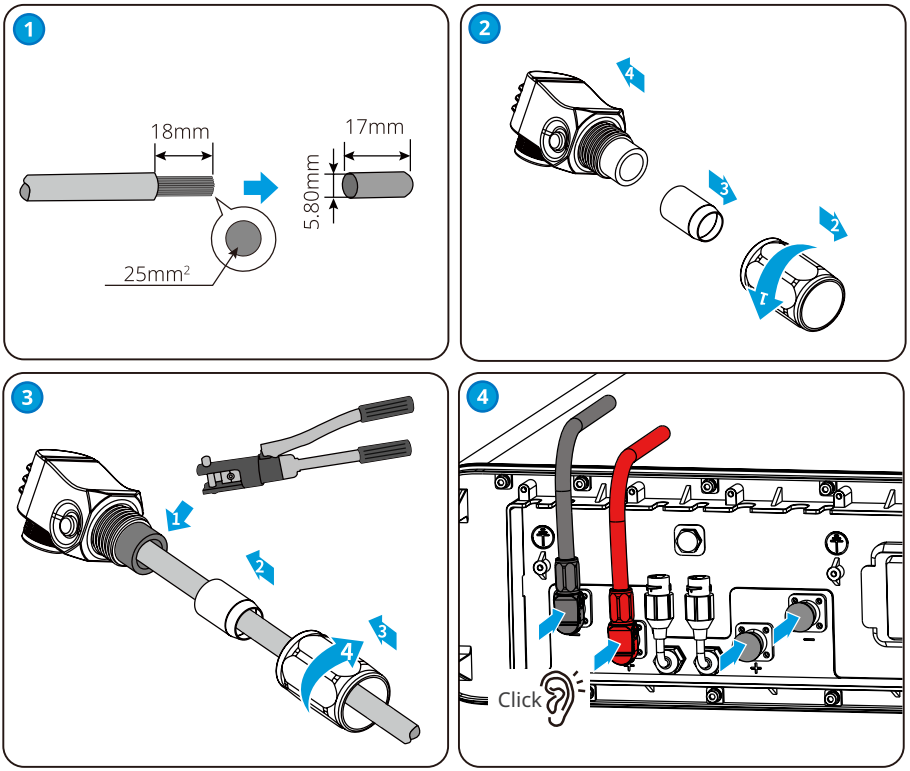

Communication Cable Connection

NOTICE

The two communication cables are the same.

- Do not use RJ45 cable with protective cover.
- When one battery is applied, connect one communication cable to the inverter by RJ45 connector and connect the other cable to the terminal resistance.
- When multiple batteries are applied, connect the communication ports in series using net cables. Connect one communication cable of the last battery to the terminal resistance.

RJ45 Registered Jack

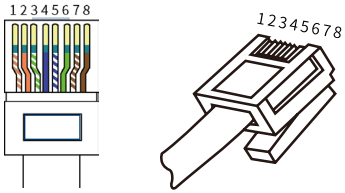

CAN COM Port

PIN	LX U5.4-L	LX U5.4-20
1	N/A	RS485_A
2	N/A	RS485_B
4	CAN_H	CAN_H
5	CAN_L	CAN_L
3,6,7,8	N/A	N/A

Step1 Remove the waterproof module.
Step2 Disassemble the waterproof module.
Step3 Route the cable through the waterproof module.
Step4 Connect the communication cable to the battery.

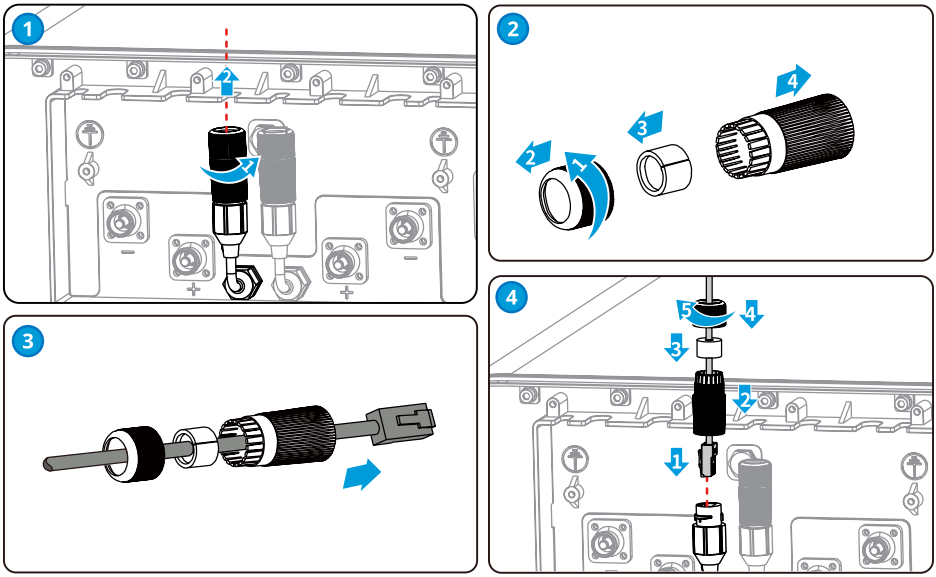

Installing the terminal resistor

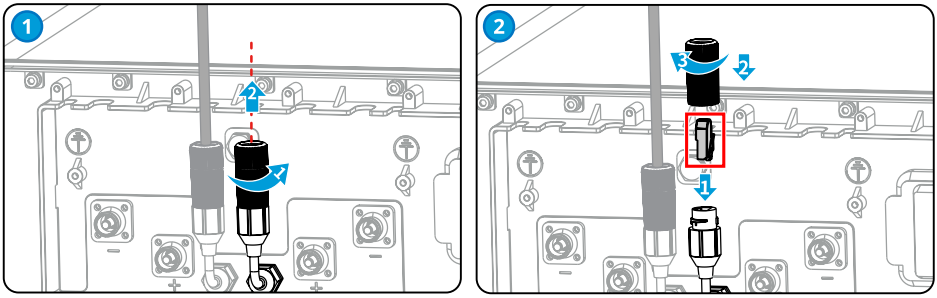

5.3.4 Install the Wire Harness Fix Bar

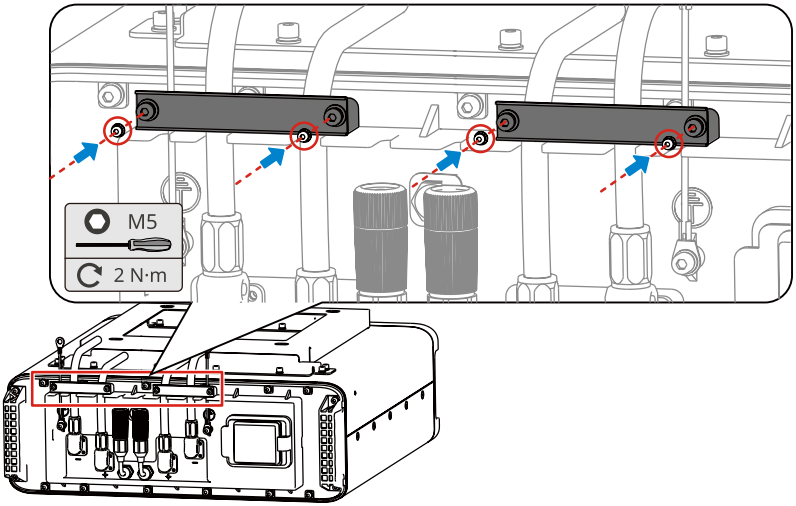

06 System Operation

6.1 Check Before Power On

Check the following items before power on. Otherwise, the Battery System may be damaged.

No.	Items
1	The equipment is installed firmly in a place where is convenient for operation and maintenance. The installation place is clean and well ventilated.
2	The ground cable, power cable, communication cable and terminal resistance are connected correctly and securely.
3	The cable ties meet the cabling requirements and are reasonably distributed. No cables or ties are broken.
4	Unused ports are sealed.

6.2 Power On

NOTICE

- The DC breaker between the inverter and the battery, and between the two batteries, shall be installed in accordance with local laws and regulations.
- The breaker should isolate both positive and negative conductors simultaneously.

LX U5.4-L

Step1 (Optional) Turn on the breaker between the inverter and the battery system.
Step2 (Optional) Turn on the breaker between the batteries (For parallelized batteries).
Step3 Turn on the inverter in the system following the instructions in the user manual of the inverter.
Step4 Turn on the Circuit-Breaker.
Step5 Press the switch button of all batteries in 30s, otherwise the equipment will start alarming.

LX U5.4-20

Step1 (Optional) Turn on the breaker between the inverter and the battery system.
Step2 (Optional) Turn on the breaker between the batteries (For parallelized batteries).
Step3 Turn on the Circuit-Breaker.
Step4 Press the battery buttons. (Only press one battery's button when batteries are in parallelized connection.)
Step5 Turn on the inverter in the system following the instructions in the user manual of the inverter.

Single battery

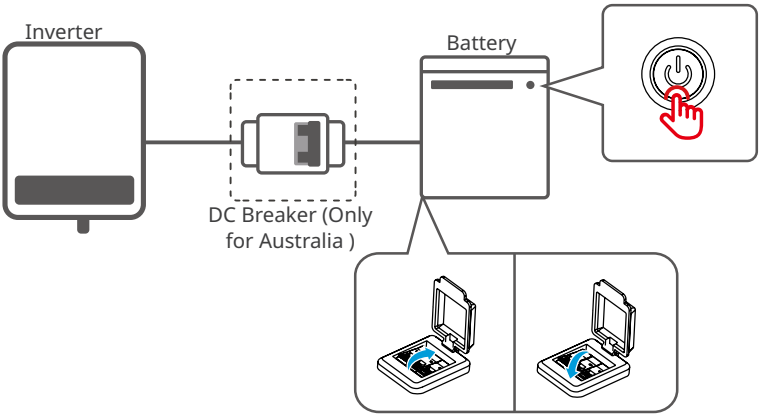

Parallelized batteries

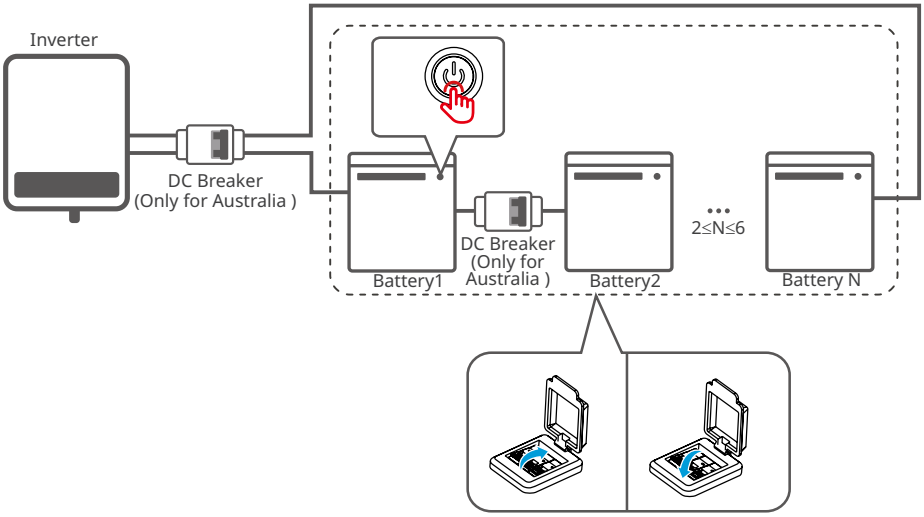

6.3 Battery Parameter Settings

Select the right options on SolarGo after connecting the battery and the inverter.

APP Installatin and Connection:

Select the battery model on SolarGo:

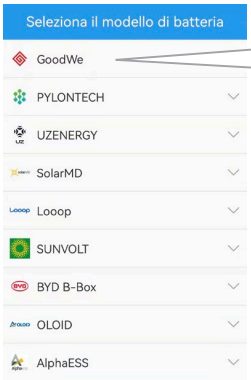

LX U5.4-L*1 or LX U5.4-20*1

LX U5.4-L*2 or LX U5.4-20*2

LX U5.4-L*3 or LX U5.4-20*3

LX U5.4-L*4 or LX U5.4-20*4

LX U5.4-L*5 or LX U5.4-20*5

LX U5.4-L*6 or LX U5.4-20*6

Select “LX U5.4-L or LX U5.4-20” on SolarGo.

NOTICE

"Battery Selection Abnormal" will be displayed if you select the wrong battery model. Please select the right battery model accordingly.

6.4 Indicator Status(LX U5.4-L)

SOC Indicator Button Indicator

Button Indicator	Status
Green Light	Standby, Working, Alert
Red Light	Faulty

6.4.1 Normal State

Button Indicator	SOC Indicator	Description
Standby:green light blinking for 1s Working:green light on		SOC<5%
		5%≤SOC<25%
		25%≤SOC<50%
		50%≤SOC<75%
		75%≤SOC<95%
		SOC≥95%

6.4.2 Alerting

Button Indicator	SOC Indicator	Alerting	Solutions
Green light blingking for 3s		Temperature Exception	Power off and restart after 2 hours.If the problem persists, please contact GoodWe.
		High Temperature	
		Low Temperature Discharging	Power off and Wait for the temperature to increase. Restart the battery. If the problem persists, please contact GoodWe.
		Overcurrent When Charging	Restart the battery. If the problem persists, please contact GoodWe.
		Overcurrent When Discharging	
		Overvoltage	
		Under voltage	Press the button consecutively for 5 times in 10s if you can charge the battery. The voltage will recover to normal.
		Low Temperature Charging	Power off and Wait for the temperature to increase. Restart the battery. If the problem persists, please contact GoodWe.
		The cell voltage difference is extremely high	Power off and restart after 2 hours.If the problem persists, please contact GoodWe.

NOTICE

- Restart the battery by pressing the switch button.
- If the batteries power off under undervoltage protection and multiple batteries are connected, just press the button of any one battery consecutively for 5 times to activate them.

6.4.3 Faulty

Button Indicator	SOC Indicator	Fault	Solution
Red light blinking for 3s		Temp. sensor failure	Restart the battery. If the problem persists, please contact GoodWe for help.
		MOS Failure	
		Circuit-Breaker Failure	Turn on the Circuit-Breaker.If the problem persists, please contact GoodWe.
		Slaver Control Communication Lost	Power off and check the communication cable. Restart the battery.If the problem persists, please contact GoodWe.
		SN Failure	Contact GoodWe for help.
		Master Control Communication Lost	Power off and check the communication cable. Restart the battery.If the problem persists, please contact GoodWe.
		Inconsistent Software Version	Contact GoodWe for help.
		Multi Master Control Failure	Start all batteries in 30s after shutting down.
		MOS Overtemperature	Power off for 2 hours.If the problem persists, please contact GoodWe.
		Communication Failure	Power off and check the communication cable. Restart the battery. If the problem persists, please contact GoodWe.

6.5 Indicator Status(LX U5.4-20)

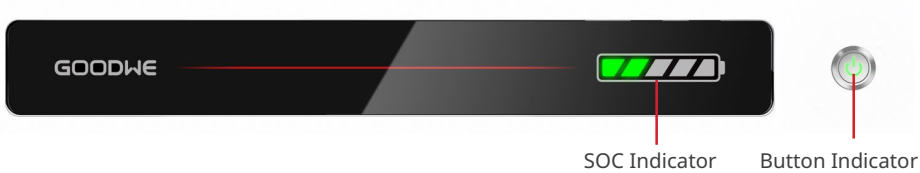

Button Indicator	Status
Green Light	Standby, Working
Red Light	Alert, Faulty

6.5.1 Normal State

Button Indicator	SOC Indicator	Description
Idle: green light blink 2 times in 1 second Standby: green light blink 1 time in 1 second Working: Steady green		SOC<5%
		5%≤SOC<25%
		25%≤SOC<50%
		50%≤SOC<75%
		75%≤SOC<95%
		SOC≥95%

NOTICE

- The SOC indicator keeps on when charging.
- The SOC indicator blinks one time when discharging.

6.5.2 Alerting

Button Indicator	SOC Indicator	Solution
Red light blink 1 time in 1 second		The alerting is dealt by the battery system itself. For more detailed information, you can check via SolarGo App.

6.5.3 Faulty

NOTICE
• Restart the battery by pressing the switch button.

Button Indicator	SOC Indicator	Fault	Solution
Steady red		Overvoltage	Power off for 2 hours.If the problem persists, please contact GoodWe.
Red light blink 1 time in 1 second		Under voltage	Contact GoodWe for help.
Steady red		Cell High Temperature	Power off for 2 hours.If the problem persists, please contact GoodWe.
		Low Temperature Charging	Power off the equipment and wait until the temperature recovers. If the problem persists after restarting, please contact GoodWe.
		Low Temperature Discharging	Power off the equipment and wait until the temperature recovers. If the problem persists after restarting, please contact GoodWe.
		Overcurrent When Charging	Restart the battery. If the problem persists, please contact GoodWe for help.
		Overcurrent When Discharging	
		Temperature Exception	Power off for 2 hours.If the problem persists, please contact GoodWe.
		The cell voltage difference is extremely high	Power off for 12 hours.If the problem persists, please contact GoodWe.
		Harness Abnormal	Restart the battery. If the problem persists, please contact GoodWe for help.
		MOS Open-Circuit Fault	
		MOS Short-Circuit Fault	
		Parallelized Connection Fault	Check the battery model. If the battery model is not correct, please contact GoodWe.
		BMU Communication Fault	Restart the battery. If the problem persists, please contact GoodWe for help.
		MCU Internal Communication Fault	
		Air Switch Short-Circuit Fault	Contact GoodWe for help.

Steady red		Precharge Failure	Restart the battery. If the problem persists, please contact GoodWe for help.
		MOS Overtemperature Fault	Power off for 2 hours.If the problem persists, please contact GoodWe.
		Current Sensor Overtemperature Fault	Power off for 2 hours.If the problem persists, please contact GoodWe.
		Microelectronic Fault	Contact GoodWe for help.

6.6 Power Off

Please follow the steps to power off the Battery System, otherwise, the System may be damaged.

LX U5.4-L

Step1 Press the switch button for at least 5s until the indicator lights off. Press the button of any one battey if multi batteries are connected.
Step2 Turn off the Circuit-Breaker.
Step3 Make sure that the SOC indicator of the battery is off.

LX U5.4-20

Step1 Disconnect the circuit breakers of all batteries.
Step2 Make sure that the SOC indicator of the battery is off.

6.7 Install the Plastic Cover

NOTICE

- Ensure that the battery can work normally before installing the cover.
- Do not press the cables during installation.

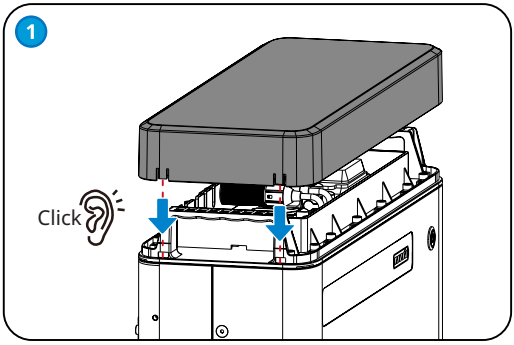

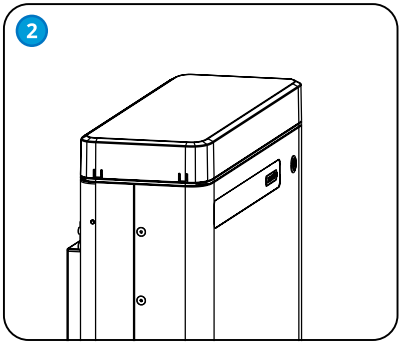

07 Technical Parameters

Technical Data		LX U5.4-L	2*LX U5.4-L	3*LX U5.4-L	4*LX U5.4-L	5*LX U5.4-L	6*LX U5.4-L
Rated Energy (kWh)*1		5.4	10.8	16.2	21.6	27	32.4
Usable Energy (kWh)*2		4.8	9.6	14.4	19.2	24	28.8
Cell Type		LFP(LiFePO4)					
Cell Configuration		16S1P	16S2P	16S3P	16S4P	16S5P	16S6P
Rated Voltage (V)		51.2 V					
Operating Voltage Range (V)		48~57.6					
Max. Continuous Discharge Current (A)*3		50	100				
Max. Discharge Power (kW)*3		2.88	5.76				
Short-Circuit Current		2.323kA@1.0ms					
Communication		CAN					
Weight (Kg)		57	114	171	228	285	342
Dimensions (W*D*H) (mm)		505×570×175 (LX U5.4-L)					
Operating Temperature (℃)		Charge:0~+50 / Discharge:-10~+50					
Storage temperature (℃)		-20~+40 (≤One Month) / 0~+35 (≤One Year)					
Humidity		0~95%					
Altitude (m)		2000					
Protection Degree		IP65					
Installation Location		Wall-Mounted / Ground-Mounted					
Round-trip Efficiency		93.0%					
Cycle Life*4		≥ 4000 @0.5C/0.5C					
Standard and Certification	Safety	IEC62619, IEC 62040, CEC					
	EMC	CE, RCM					
	Transportation	UN38.3					

*1: Test conditions, Cell Voltage 2.5~3.65V, 0.5C charge & discharge at +25±2 °C for battery system at beginning life. System Usable Energy may vary with different Inverter.
*2: Test conditions, 90% DOD, 0.5C charge & discharge at +25±2 °C.
*3: Nominal Dis-/Charge Current and power derating will occur related to Temperature and SOC.
*4: Based on Cell under 0.5C/0.5C @ 25±2℃ test condition and 80% EOL.

Technical Data		LX U5.4-20	2*LX U5.4-20	3*LX U5.4-20	4*LX U5.4-20	5*LX U5.4-20	6*LX U5.4-20
Usable Energy (kWh)*1		5.4 kWh	10.8 kWh	16.2 kWh	21.6 kWh	27 kWh	32.4 kWh
Cell Type		LFP(LiFePO4)					
Cell Configuration		16S1P	16S2P	16S3P	16S4P	16S5P	16S6P
Nominal Voltage (V)		51.2					
Operating Voltage Range (V)		47.5~57.6					
Nominal Dis-/Charge Current (A)*2		50	100				
Nominal Power (kW)*2		2.56	5.12				
Short-Circuit Current		2.323kA@1.0ms					
Communication		CAN, RS485					
Weight (Kg)		57	114	171	228	285	342
Dimensions (W*D*H mm)		505×570×175 (LX U5.4-20)					
Operating Temperature Range (℃)		Charge:0~+50 / Discharge:-10~+50					
Storage Temperature (℃)		-20~+40 (≤ One Month) / 0~+35 (≤One Year)					
Relative Humidity		0~95%					
Max. Operating Altitude (m)		2000					
Ingress Protection Rating		IP65					
Mounting Method		Wall-Mounted / Grounded					
Round-trip Efficiency		95.0%					
Cycle Life*3		≥ 4000 @0.5C/0.5C					
Standard and Certification	Safety	IEC62619, IEC63056, IEC 62040, CEC					
	EMC	CE, RCM					
	Transportation	UN38.3					

*1: Test conditions, Cell Voltage 2.5~3.65V, 0.5C charge & discharge at +25±3 °C for battery system at beginning life. System Usable Energy may vary with different Inverter.
*2: Nominal Dis-/Charge Current and power derating will occur related to Temperature and SOC.
*3: Based on Cell under 0.5C/0.5C @ 25±2℃ test condition and 80% EOL.

For Australia:

Technical Data		LX U5.4-20	2*LX U5.4-20	3*LX U5.4-20	4*LX U5.4-20	5*LX U5.4-20	6*LX U5.4-20
Rated Energy (kWh)		5.4	10.8	16.2	21.6	27.0	32.4
Usable Energy (kWh)*1		5.4	10.8	16.2	21.6	27.0	32.4
Cell Type		LFP(LiFePO4)					
Cell Configuration		16S1P	16S2P	16S3P	16S4P	16S5P	16S6P
Rated Capacity (Ah)		105	210	315	420	525	630
Nominal Voltage (V)		51.2					
Rated DC Power (kW)		2.56	5.12				
Operating Voltage Range (V)		47.5~57.6					
Max. Charging / Discharging Current (A)		50	100				
Max. Charging / Discharging Power (kW)		2.56	5.12				
Fault current (A)		990	1265	1393	1469	1518	1552
Operating Temperature (°C)		Charge: 0 ~ +50; Discharge: -10 ~ +50					
Relative Humidity		0 ~ 95%					
Max. Operating Altitude (m)		2000					
Communication		CAN, RS485					
Weight (Kg)		57	114	171	228	285	342
Dimensions (W×H×D mm)		505×570×175 (LX U5.4-20)					
Ingress Protection Rating		IP65					
Mounting Method		Wall Mounted / Grounded					
Warranty		10 Years (Performance Warranty) / 10 Years (Product Warranty)					
Standard and Certification	Safety	IEC62619, IEC63056, IEC 62040, CEC					
	EMC	CE, RCM					
	Transportation	UN38.3					

*1: Test conditions, Cell Voltage 2.5~3.65V, 0.5C charge & discharge at +25±2 °C for battery system at beginning life. System Usable Energy may vary with different Inverter.

08 Maintenance

Item	Period
Fully charge the battery and discharge it to 25~50% if the battery is not in use.	Once Every 6 months
Check the wall mounting plate, fix it if it is not secured.	Once Every 6 months
Check whether the outer shell is broken. Repair the painting or contact after-sales service if there is any broken.	Once Every 6 months
Check whether there is an exposed cable. Replace the exposed cable or contact after-sales service for help.	Once Every 6 months
Check whether there is debris accumulation around the battery to avoid affecting heat dissipation.	Once Every 6 months
Check for water and pest to avoid prolonged intrusion.	Once Every 6 months

⚠WARNING

- Please contact after-sales for help if you find any problems that may influence the battery or the inverter. Disassemble without permission is strictly forbidden.
- Please contact after-sales for help if the conductive wire is exposed because high voltage danger exists. Do not touch or disassemble privately.
- In case of other emergencies, contact the after-sales as soon as possible. Please operate following the guidance of the after-sales, or just wait for the after-sales service operators.

Remove the Plastic Cover

Gently pry up two clips on one side using a screwdriver to remove the plastic cover.

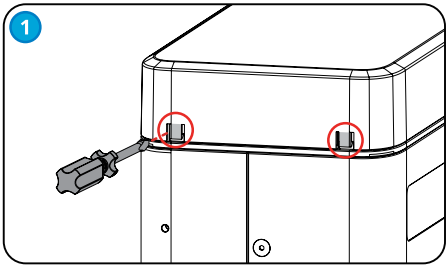

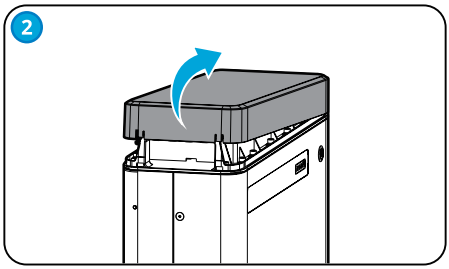

Tell me more

Call 01283 722588
Email info@marley.co.uk
Or visit marley.co.uk

Marley, Lichfield Road, Branston, Burton upon Trent, DE14 3HD

V1.0 01.02.2024